INTERCOM

FEATURES
Single and double crimp connector.
Conforms to HE13, HE14, IEC 603-8.
Double Wipe Removable contact.
AWG 22 - 24 - 26 - 28.

TECHNICAL DATA
Material: phosphor bronze.

Electrical
Current rating: 3 A maxi.
Voltage: 500 V eff.
Insulation resistance: $1x10^5$ MΩ mini.
Contact resistance: 20 mΩ maxi.

Mechanical
Temperature rating: -55°C to +125°C
Maximum Insulation
Diameter: Ø 1.45 mm

Insertion force:
Tin version: 3 N Maxi per contact
Gold version: 1.5 N maxi per contact

Withdrawal force:
Tin version: 0.2 N mini per contact
Gold version: 0.15 N mini per contact

PACKAGING
Recyclable cardboard reels.
Tooling P/n: Crimping.

Contact
Crimping tool consult us

Contact to be used with housings:
485 3248 0xx 740 (single row)
485 3401 0xx 740 (double row)

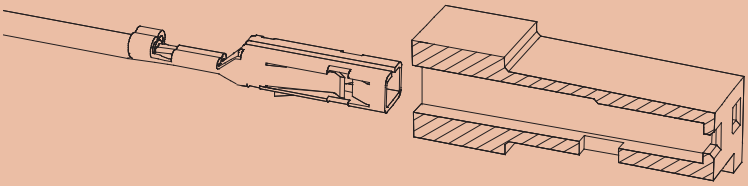

a	b	c	d	e
485	3250	000	4x	x

d Plating
2 Tin 4 µm
7 Selective gold
0.2 µm over 1.27 µm NI

e Packaging
1 reel (8000 contacts each)
2 reel (1000 contacts each)

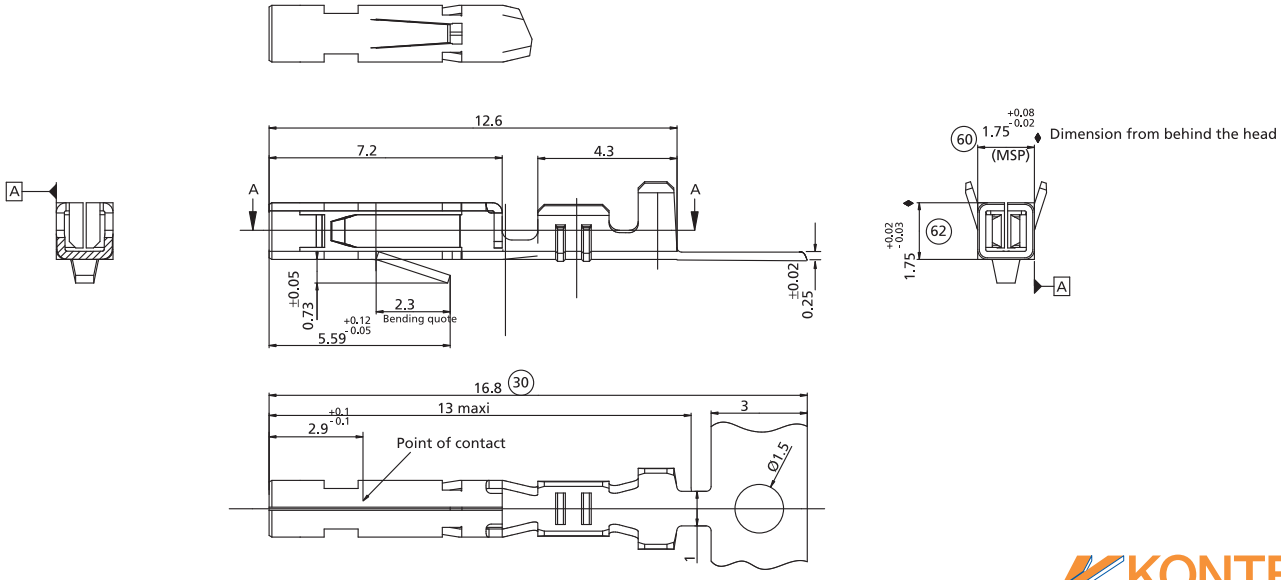

"Due to technical progress, all design, specification and components are subject to change without notice".

KONTEK COMATEL
ELECTRONIC CONNECTORS MANUFACTURING