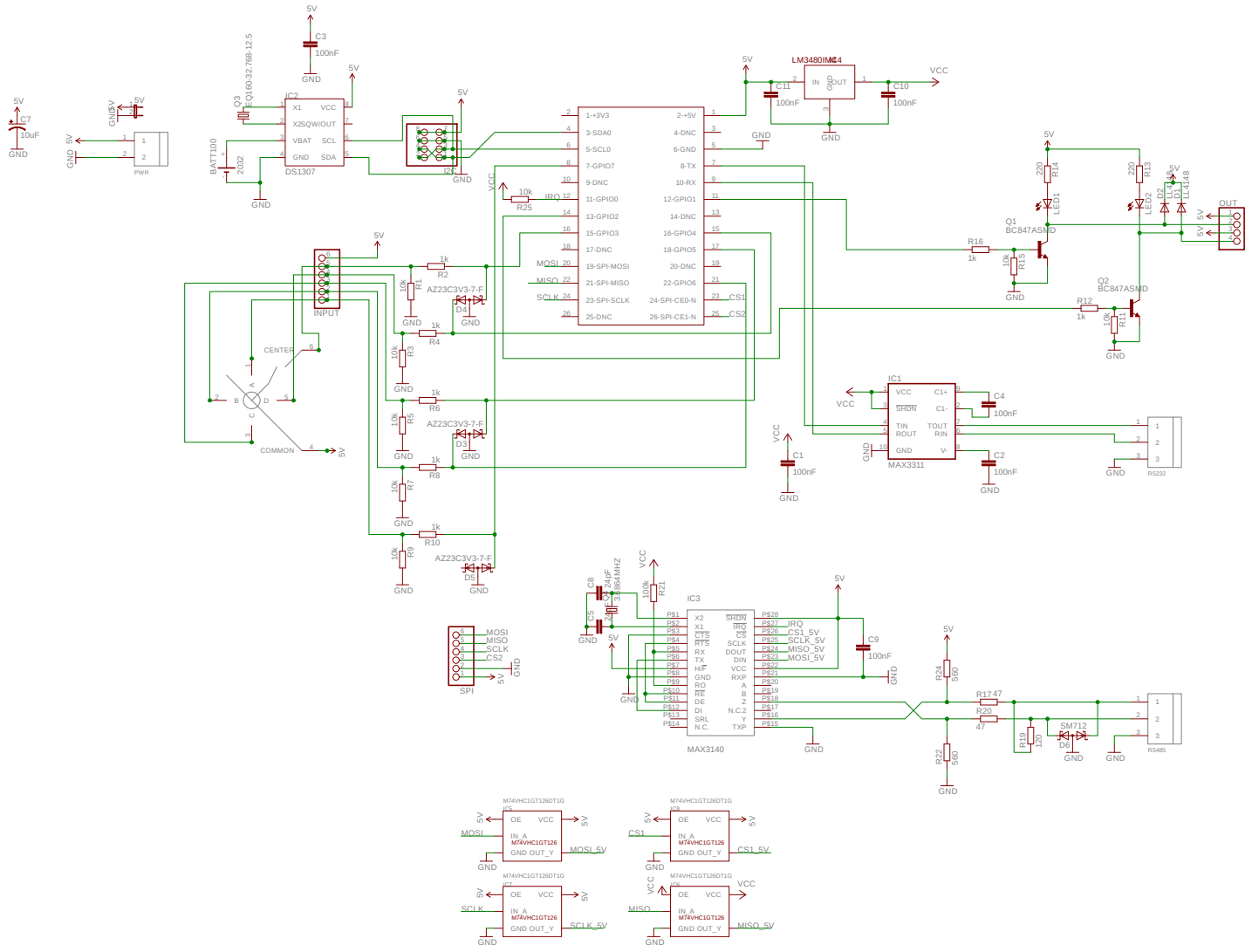
5V
C7
10uF
GND
PWR
C3
100nF
IC2
DS1307
X1
VCC
X2SQW/OUT
VBAT
SCL
GND
SDA
BATT100
2032
Q3
EQ160-32.768-12.5
IZ
LM3480IMF-4
IN
OUT
C11
100nF
C10
100nF
VCC
1-+3V3
2-+5V
3-SDA0
4-DNC
5-SCL0
6-GND
7-GPIO7
8-TX
9-DNC
10-RX
11-GPIO0
12-GPIO1
13-GPIO2
14-DNC
15-GPIO3
16-GPIO4
17-DNC
18-GPIO5
19-SPI-MOSI
20-DNC
21-SPI-MISO
22-GPIO6
23-SPI-SCLK
24-SPI-CE0-N
25-DNC
26-SPI-CE1-N
IRQ
MOSI
MISO
SCLK
CS1
CS2
R25
10k
INPUT
CENTER
COMMON
R1
R2
R3
R4
R5
R6
R7
R8
R9
R10
AZ23C3V3-7-F
D4
D3
D5
R14
220
LED1
R15
LED2
D1
D2
LL4148
Q1
BC847ASMD
Q2
R16
R12
OUT
IC1
MAX3311
VCC
SRDN
C1+
C1-
TIN
ROUT
TOUT
RIN
V-
C4
C2
C1
RS232
SPI
MOSI
MISO
SCLK
CS2
IC3
MAX3140
X2
X1
CTS
RTS
RX
TX
H/F
GND
RO
RE
DE
DI
SRL
N.C.
SRDN
IRQ
CS
SCLK
DOUT
DIN
VCC
RXP
A
B
Z
N.C.2
Y
TXP
PS1
PS2
PS3
PS4
PS5
PS6
PS7
PS8
PS9
PS10
PS11
PS12
PS13
PS14
PS28
PS27
PS26
PS25
PS24
PS23
PS22
PS21
PS20
PS19
PS18
PS17
PS16
PS15
IRQ
CS1_5V
SCLK_5V
MISO_5V
MOSI_5V
C8
24pF
C5
24pF
3.6864MHZ
R21
100k
C9
100nF
R24
560
R22
560
R1747
R20
47
R19
120
SM712
D6
RS485
M74VHC1GT126DT1G
IC5
IC7
IC8
IC6
OE
VCC
IN A
GND
OUT Y
MOSI
MOSI_5V
SCLK
SCLK_5V
CS1
CS1_5V
MISO
MISO_5V