D
THIS DRAWING AND/OR ELECTRONIC FILE IS NOT A PROPRIETARY DESIGN OF DELPHI PACKARD ELECTRIC SYSTEMS, AND IS NOT AVAILABLE FOR DISTRIBUTION OUTSIDE DELPHI PACKARD ELECTRIC SYSTEMS, UNLESS THE LETTER "D" APPEARS IN THE BOX TO THE LEFT OF THIS NOTE.
DO NOT SCALE

PART NO 1530 0003

DATE	SYM	REVISION RECORD	AUTH	DR	CK
20MY97	E7	REVISION COLUMN CLEARED,			
		REDRAWN, UPDATED AND			
		REVISED NOTES	177541	GMC	JIB

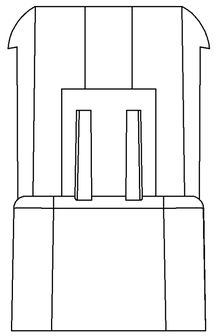

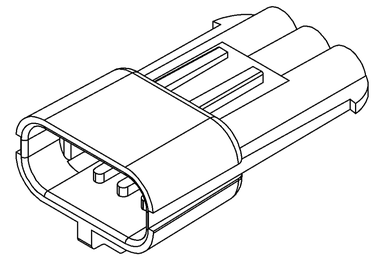

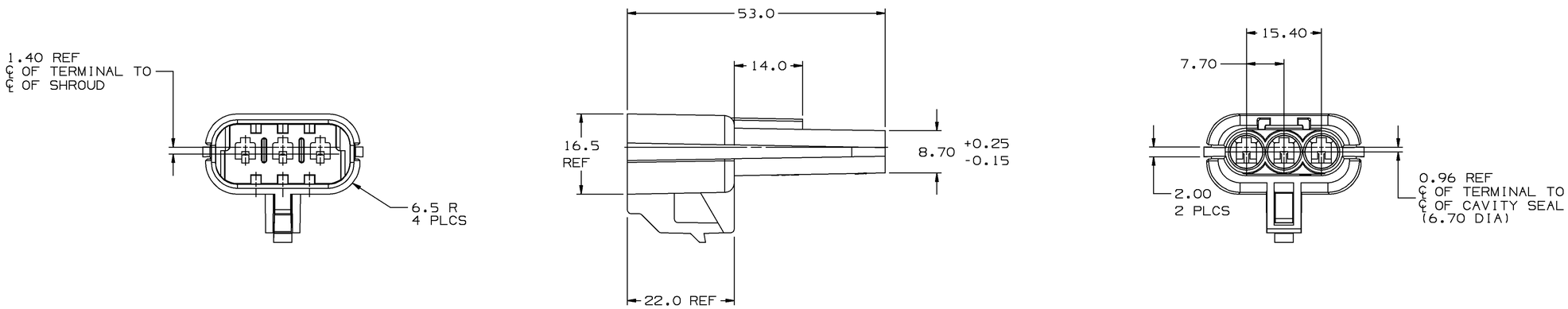

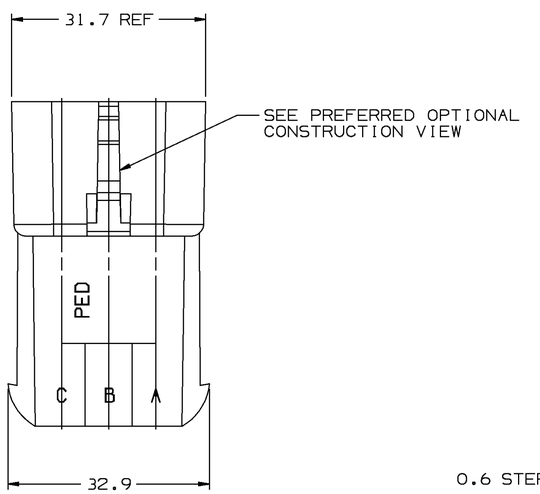

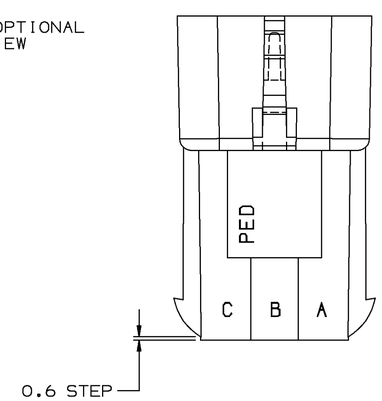

PREFERRED OPTIONAL CONSTRUCTION

NOTES:

1. UNLESS OTHERWISE SPECIFIED AND/OR INDICATED:
   DIMENSIONS ARE TO FACE OF VIEW SHOWN AND AUTOMATICALLY ROUNDED BY COMPUTER FOR INSPECTION. (SEE MATH MODEL FOR PRECISE DIMENSION)
   FOR ALL OTHER DIMENSIONS NOT SHOWN BUT REQUIRED FOR TOOL BUILD, SEE MATH MODEL FOR PRECISE TOOL PATH DATA.

2. MATING COMPONENTS:
   CONNECTOR 12040977 OR EQUIVALENT
   TERMINAL 12040559 OR EQUIVALENT
   TPA 15300015 OR EQUIVALENT
   CPA 12020833 OR EQUIVALENT

E7

3. DIMENSIONS MARKED "REF" ARE FOR REFERENCE ONLY AND NO TOLERANCE LIMITS ARE ESTABLISHED.

4. SEALING CODE 3.

PART NO 1530 0003

DRAWING TYPE PID	OTHER DRAWINGS AVAILABLE DETAIL
Uigraphics II	METRIC DIMENSIONS ARE IN MILLIMETERS UNLESS OTHERWISE SPECIFIED
THIRD ANGLE PROJECTION	TOLERANCE UNLESS OTHERWISE SPECIFIED DECIMAL: ANGULAR ± 2° ONE PLACE ± 0.3 TWO PLACE ± 0.15
CODE NO 6900 / QC	DES
DWG DATE 18AP84	DR
SCALE NONE	CK C.M CAPITO 08MR84
REFERENCE NO 15300003 "R5" SIZE	APPR J.D. DAUGHERTY 03MY84
	VOL CM³ 8.906
MATERIAL SPEC R0071754 PA66 HS IM BLK	
NAME CONN 3M M/P 280	
PART NUMBER 1530 0003	SIZE A1

DELPHI PACKARD ELECTRIC SYSTEMS
WARREN, OHIO 44486